# Investigation of cultivable microorganisms in the stratosphere collected by using a balloon in 2005

By

Yinjie YANG*, Shin-ichi YOKOBORI*, Jutaro KAWAGUCHI*,
Takamasa YAMAGAMI**, Issei IIJIMA**, Naoki IZUTSU**, Hideyuki FUKE**,
Yoshitaka SAITOH**, Yukihiko MATSUZAKA**, Michiyoshi NAMIKI**,
Shigeo OHTA**, Michihiko TORIUMI**, Kazuhiko YAMADA**, Motoharu SEO**
and Akihiko YAMAGISHI* †

**Abstract:** Microbial sampling was conducted in the stratosphere above Pacific Ocean adjacent to Japan Main Island by using a balloon in June 2005. Air was filtrated by membrane filters during sampling. Totally 4 isolates were obtained from the membrane filters incubated on culture medium. From their morphological characteristics, UV resistance and 16S rDNA sequencing data, the isolates appeared to be endospore-forming bacteria of terrestrial origin (3 *Bacillus* strains and 1 *Paenibacillus* strain). Endospores are known to have higher UV-resistance than vegetative cells. The isolation of endospore-forming bacterial species is associated with the high UV level in the stratosphere.

**Key words:** Cultivable microorganism, stratosphere, endospore formers

## 1. Introduction

The information about microorganisms drifted in high-altitude atmosphere is not only significant for understanding possible path for microbial dispersal from one part of the earth to another (Griffin *et al*., 2001; Dennis *et al*., 2006) and their role in forming cloud condensation nuclei in certain regions (Vali *et al*., 1976), but also important for testing the hypothesis of Panspermia (Horneck and Brack, 1992; Raulin-Cerceau *et al*., 1998; Mileikowsky *et al*., 2000; Wainwright *et al*., 2003). The troposphere is constantly replenished by various microbiota from soil, water and other sources, while the abundance and genera of microbes in the troposphere generally decrease with increasing height (Fulton, 1966; Lighthart and Shaffer, 1995; Shaffer and Lighthart, 1997; Griffin *et al*., 2001; Griffin *et al*., 2003). There would be rare occasion to transport particles upward above the tropopause. However, the presence of microorganisms at stratospheric altitudes has been reported (Table 1). Fungi and endospore-forming bacteria were the majority of stratospheric microbial collection of sparse microbial surveys in USA, Russia and India regions (Table 1). In Japan, we have isolated one *Deinococcus* strain (ST0316) from dust sample collected at the bottom of stratosphere (10-12 km altitude), and one *Deinococcus* strain (TR0125), one *Streptomyces* strain, one *Bacillus* strain and one *Panebacillus* strain from tropospheric dust samples by using an aircraft (Yang *et al*., 2008). UVC (200-280 nm) is harmful to living organisms. High $UVC_{254nm}$-resistance of the five strains suggested a possible correlation between elevated UV levels and bacterial survival in high-altitude atmosphere (Yang *et al*., 2008).

Our aircraft isolates evidenced the presence of cultivable microorganisms in the atmosphere up to 12 km altitude. We conducted microbial sampling at 12-35 km altitudes above Pacific Ocean close to northern Japan Main Island by using a balloon. We isolated several strains and analyzed the UV resistance.

* Department of Molecular Biology, Tokyo University of Pharmacy and Life Science
** Institute of Space and Astronautical Science, Japan Aerospace Exploration Agency
† Correspondence: Dr. Akihiko Yamagishi (yamagish@ls.toyaku.ac.jp)

**Table 1** Previous microbial samplings at high-altitude atmosphere

| Year | Country | Mission | Altitude (km) | Microbial Collection | Reference |
|---|---|---|---|---|---|
| 1936 | USA | Balloons | 11-21 | **5 *Bacillus* sp.**<br>*Macrosporium* sp., *Rhizopus* sp.,<br>*Penicillium* sp. and 2 *Aspergillus* sp. | Rogers and Meier, 1936 |
| 1962, 1963, 1965 | USA | Balloons | 9-27 | (Predominant isolates)<br>**Micrococci and spore-forming rods**<br>*Aspergillus* sp., *Alternaria* sp.,<br>*Penicillium* sp. and *Cladosporium* sp. | Greene *et al.*, 1964;<br>Bruch, 1967 |
| 1975 | Russia | Meteorological rockets | 48-77 | ***Mycobacterium* sp., *Micrococcus* sp.**<br>*Circinella* sp., *Aspergillus* sp.,<br>*Papulaspora* sp. and *Penicillium* sp. | Imshenetsky *et al.*, 1976 |
| 2001 | India | Balloon | 41 | **5 *Bacillus* sp. and *Staphylococcus* sp.**<br>*Engyotontium* sp. | Wainwright *et al.*, 2003;<br>Suresh *et al.*, 2004 |
| 2003 | USA | High-altitude aircraft | 20 | **2 *Bacillus* sp.**<br>*Penicillium* sp. | Griffin, 2005 |
| 2004 | USA | High-altitude aircraft | 20 | ***Micrococci*, *Microbacteria*,**<br>***Staphylococcus* sp., *Brevibacterium* sp.** | Griffin, 2008 |

Bacterial species are boldfaced. Other species are fungi.

## 2. Materials and methods

### 2.1 Sampling

A sampling apparatus (Fig. 1) was designed to capture microorganisms in the high atmosphere. The apparatus has been described previously (Iijima *et al*., 2006). Mixed cellulose ester membrane filters of 0.45-μm pore size and 90-mm diameter (Advantec MFS, Japan) was positioned in filter holders and sterilized for collection of microorganisms. Then the filter holders were assembled into the device. The components that cannot be autoclaved were thoroughly wiped with 70% ethanol before assembly. The sterilized apparatus was maintained airtight except during sampling operation. Gate valves were in closed status from assembly completion to the beginning of sampling at designed altitude. The effectiveness of sampling microorganisms using this device was confirmed under simulated high-altitude conditions (Iijima *et al*., 2006).

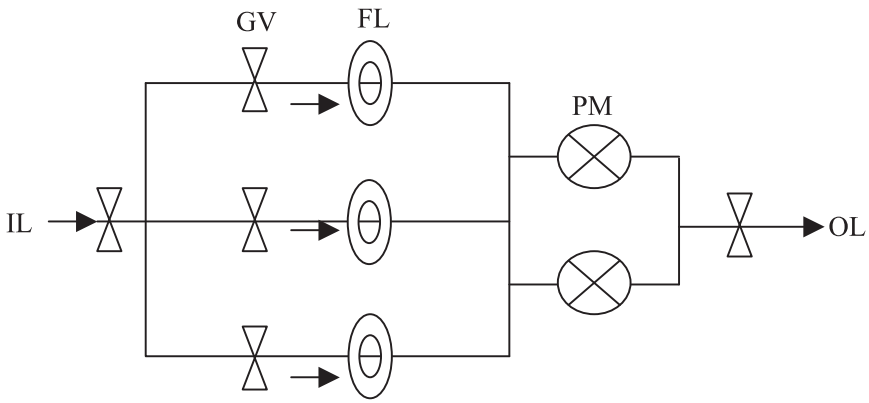


**Fig.1** Flow diagram of the device used for sampling microorganisms at high altitudes. The air was taken from Inlet (IL), filtered by membrane filters (FL) on filter holders and went out from exit (OL). Flow rate of air passing each filter was controlled by pumps (PM) and gate valves (GV). It is very unlikely that any contamination occurs from the outlet sides of the filters, since airborne microbes are supposed to be collected on the filters and no microbe are expected to pass through the filters.

The device was mounted onto the gondola that hanged from a balloon and launched to the high atmosphere from Sanriku Balloon Center (Iwate Prefecture) on June 6, 2005 (Fig. 2A). Operational integrity of the sampling apparatus was tested using sampling filter No. 1 just before launch for 1 min. The volume of the filtered air was about 32 liter. The balloon flew along with natural west or east winds at different altitudes. Flight altitudes (Fig. 2B) were adjusted by exhausting of gas inside of the balloon or dropping ballast in the gondola. At 12 km altitude, sampling started by pumping and opening gate valves that allow the air filtered through the No.1 filter. It was used to clean the tubing and to collect microbes at 12 – 18 km altitude. Filtered air volume was about 18 liter at Standard Temperature and Pressure (STP). After 39 min, the pump was turned off and the valves were switched to pump air for 18 min through the No.3 filter. This filter was used to further test cleanness of the tubing and to collect microbes at 18 – 20 km altitude. Filtered air volume was about 5 liter (STP). Then the valves were controlled to pump air for about 20.5 hours through the No.2 filter. Because of the cleaning operation using the No.1 and No.3 filters, the filter No.2 is considered to be the most reliable sampling filter for upper-atmospheric microbes in this study. All gate valves were closed and the pump was turned off at 30 km altitude before balloon's landing. Total amount of air filtered was about 350 liter (STP). After landing on the sea, the sampling device was immediately recovered by using a ship and transported to the laboratory.

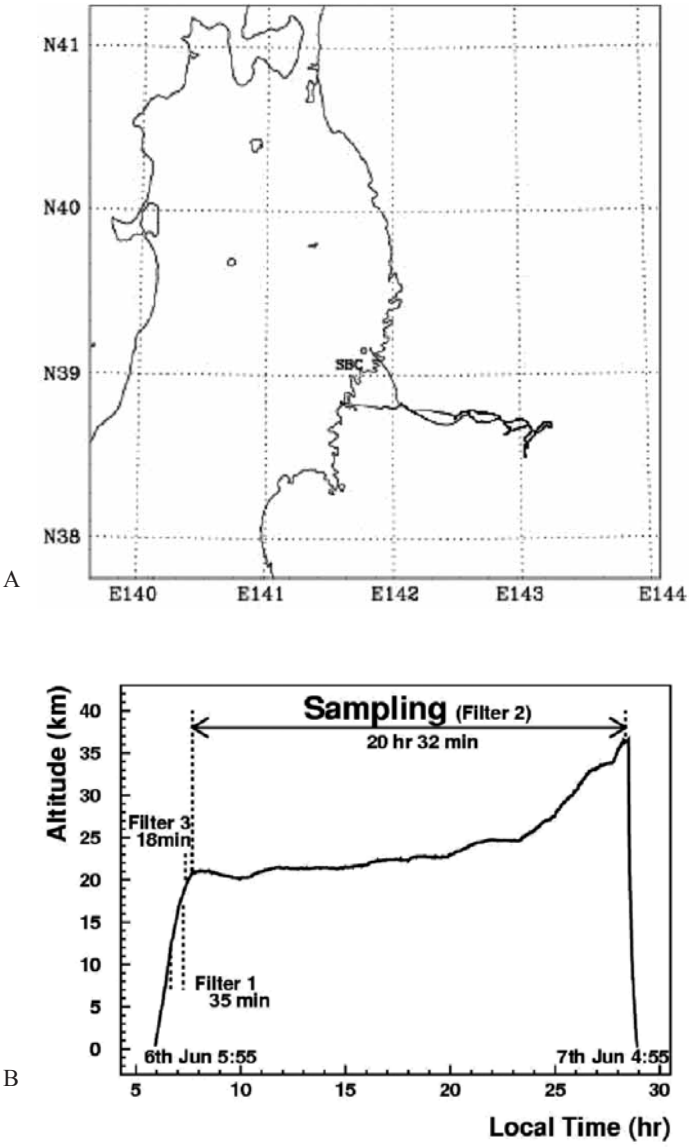


**Fig.2** Trajectory of the balloon (A) and the profile of sampling altitudes (B). SBC: Sanriku Balloon Center, Iwate, Japan. 5:55; balloon launched. 6:40-7:19; pumping air through the No.1 filter. 7:21-7:39; pumping air through the No.3 filter. 7:50-4:22 (2nd day); pumping air through the No.2 filter. 4:55 (2nd day); balloon landed on the seawater.

**2.2 Isolation and growth**

Filter holders were detached from the sampling device. After the surface of the filter holders was completely cleaned by 70% ethanol, the filters were taken out in a clean bench, placed on TGE agar plates containing Bacto mTGE broth (Difco, USA) and incubated in the dark at 30℃ for 2 weeks. Bacterial colonies appeared only on the upper side of the filters on the plates. The colonies were transferred into mTGE broth medium. Except specially stated, the cultures grown in mTGE medium at 30℃ were used.

**2.3 Isolate identification**

Morphology, motility and endospore formation of the isolates were investigated by using an Olympus BX-FLA microscope (Olympus, Japan). Species affiliation of the isolates was analyzed by molecular biological methods. Following DNA extraction of each bacterial isolate, 16S rRNA gene sequence was amplified by PCR and determined by 3130xl Genetic Analyzer (Applied Biosystems, Foster, USA). The 16S rDNA sequences of the isolates were aligned with 16S rDNA sequences of the closely related species using ClustalX 1.83 (Thompson *et al*., 1997). Well-aligned regions (654 bps) selected with Gblocks (Castresana, 2000) were used for reconstruction of neighbor-joining tree under the Kimura's 2-parameter model with PAUP 4 beta 10 (Swofford, 2003).

**2.4 Determination of UV resistance**

To determine UV resistance of the isolates (Miller, 1992; Arrage *et al*., 1993), bacterial endospores or exponentially-grown cells suspended in 20 mM $KH_2PO_4$ buffer (pH 7.0) were exposed to UVC light (254 nm) from a GL-15 germicidal lamp (National, Okayama, Japan) for different period. UVC intensity at specific distances from the lamp was estimated with a J-225 radiometer (UVP, Upland, USA). Percent survival was calculated from the number of colonies appeared from irradiated cells against that of non-irradiated cells. For comparison, we also tested UV resistance of two ground isolates, a spore-forming bacterial isolate *B. subtilis* strain PY79 (from Dr. W. L. Nicholson) and an *E. coli* strain MG1665 wild type.

## 3. Results

Two isolates (strain BL511 and strain BL512) were obtained from the cleaning filter (filter No.1). One colony was found on the test filter (filter No.3) but accidentally lost before sub-culturing. Two isolates (strain BL521A and strain BL521B) were obtained from the sampling filter (filter No.2). In the culture of late exponential growth, > 99.2 % cells of each isolate were in vegetative form under the microscope. The vegetative cells of all the isolates were similar in morphology being rod-shaped (1.0-5.0 μm in length). All the isolates formed abundant endospores after 1-week incubation in mTGE broth or on mTGE agar.

The 16S rDNA sequences of four isolates share more than 99% similarity to those of endospore-forming species previously recorded in public databases. The closest relatives of isolate *Bacillus* BL511 (Fig. 3) were found to be an isolate *B. altitudinis* JCM 13350 (Suresh *et al*., 2004) from 40 km altitude and the most commonly isolated bacteria *B. pumilus* from the surfaces of spacecraft when tested for forward planetary protection program (Venkateswaran *et al*., 2001; La Duc *et al*., 2003; Link *et al*., 2004). Isolate BL512 was a close relative of the reported isolate *B. sphaericus* NP71 from 20 km altitude (Griffin, 2005). Isolates BL521A and BL521B shared the highest identity to the species *B. pycnus* and the members of the genus *Paenibacillus*, respectively. Overall, three of the isolates were the strains of the genus *Bacillus*, while the fourth was a *Paenibacillus* strain.

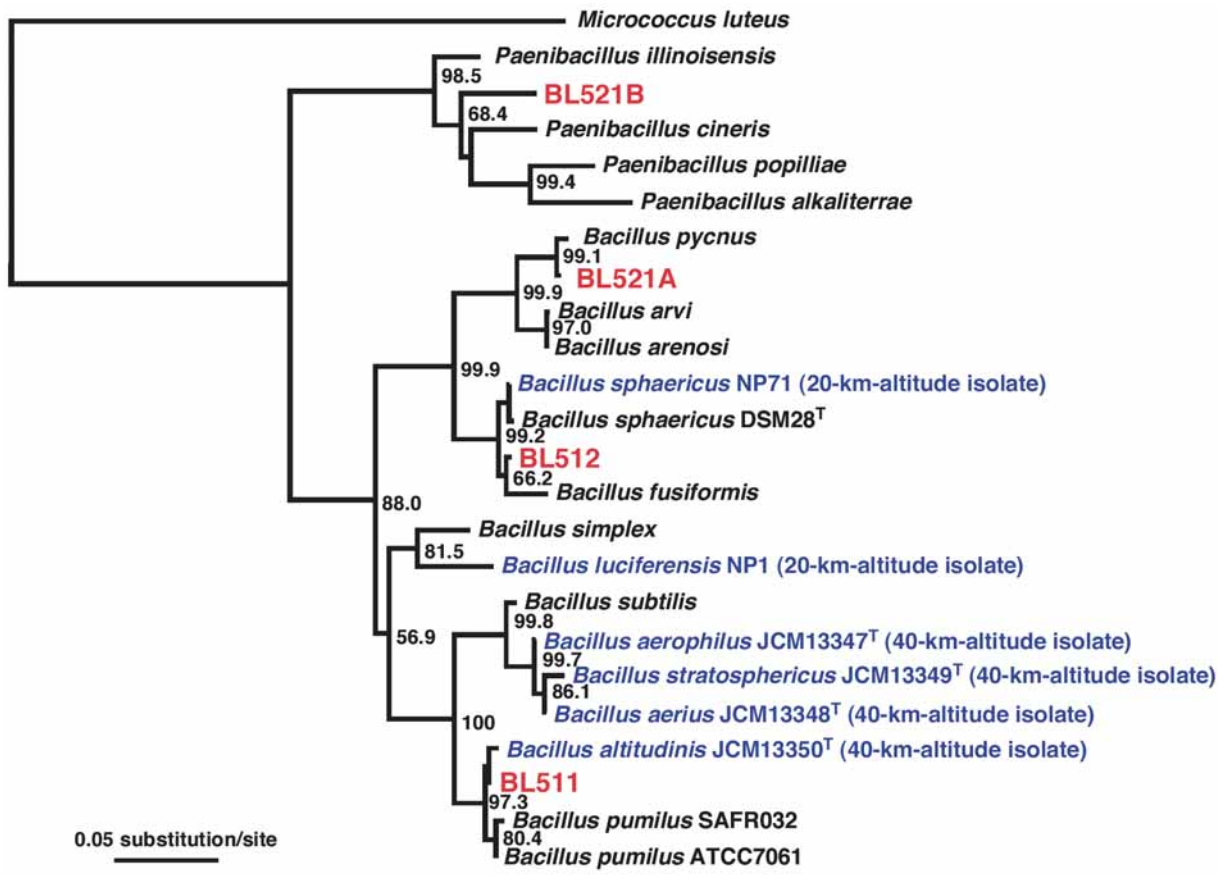


**Fig.3** Phylogenetic tree showing the relationship between the isolates in this study (BL511, BL512, BL521A, BL521B) and closely related species of *Bacillus and Paenibacillus. Micrococcus luteus* (DSM 20030$^T$) was used as an outgroup.

UVC resistance of the stratospheric isolates was shown in Table 2. Endospores of each isolate were more UVC resistant than their vegetative cells. Endospores of most stratospheric isolates exhibited UVC resistance comparable to the ground isolate (PY79) and much higher than *E. coli*. The endospores of isolate *Bacillus* BL511, exhibited much higher resistance to UVC irradiation than other isolates in this study.

**Table 2** UVC resistance of the isolates

| Isolates | $LD_{90}$ ($J/m^2$) | |
|---|---|---|
| | vegetative | spore |
| BL511 | 95±19 | 395±30 |
| BL512 | 13±10 | 31±9 |
| BL521A | 22±8 | 103±20 |
| BL521B | 32±11 | 73±13 |
| PY79$^{wt}$ | 30±12 | 105±18 |
| *E. coli* | 28±10 | |

$LD_{90}$ value is the dose of UV radiation needed to give 90% killing of spores or vegetative cells in dilute aqueous solution (Mason and Setlow, 1986; Riesenman and Nicholson, 2000; Link *et al*., 2004). Strain PY79$^{wt}$ is a ground isolate. Mean values from three independent measurements are indicated.

## 4. Discussion

Possible bio-contamination before launch was a great concern for sampling microbes in the high atmosphere. It is impossible to state absolutely that the isolates are not contaminants, as long as the sampler was sent from the ground and samples were analyzed on the ground. Particularly in the study using balloons, it is unrealistic to sterilize huge balloons and keep them sterile until high altitudes. In this study, we made every effort within our resources to reduce the possibility of contamination. To the most extent, contamination was reduced by strict cleaning of sampling apparatus, starting sampling by opening gate valves at designed high altitude, proper function of the balloon and sampling parts at high altitudes, the cleaning filters, ending sampling by closing gate valves at high altitude before landing, no seawater leaking into the sampling device, and careful operation of detaching filter holders on clean bench. Since the No. 1 filter was activated on the ground to test instrumental functioning and in the upper atmosphere to clean possible contaminates in the tubing, it is uncertain that the two isolates (BL511 and BL512) from this filter are ground contaminates or collected from on-site upper atmosphere. Because of the cleaning operation using the No.1 and No. 3 filters, the two isolates from the sampling filter No. 2 (BL521A and BL521B) are very likely to be stratospheric isolates.

From the analyses of morphological characteristics, UV resistance and phylogeny, these isolates appeared to be terrestrial origin. All these isolates were identified to be bacterial endospore formers. Their morphology, UV resistance and 16S rDNA sequences were not significantly different from terrestrial endospore formers previously reported. Since endospore formers usually produce endospores when they meet unfavorable environments (Riesenman and Nicholson, 2000), endospore-formation is advantageous for their survival in stratospheric environment that is desiccated and nutrient-deplete. Higher UVC resistance of the endospores than that of their vegetative cells is also an advantage of the endospores to survive in stratosphere where UV level is higher than the ground.

Spore formers dominated in the cultivable populations in high-altitude atmosphere. Since the majority of the isolates from previous studies were also spore formers (fungi and bacteria), the predominance of spores in the high atmosphere is most likely a global phenomenon. Although physical environment experienced ranges over many harsh factors during vertical transport via various mechanisms (e.g. storm, volcanic eruption, impact events, human activities), the cultivated microorganisms from previous and current studies suggest that many spore formers are successful in surviving through the transport to the upper atmosphere. This suggests their potential on escaping the earth and the seeding of life to extraterrestrial planets. Although *Deinococcus* isolate was not obtained in the current study, previous isolation of *Deinococcus* strains from our high-altitude samples (Yang *et al*., 2008) indicated that *Deinococcus* also have high potential in surviving harsh environment (Murray, 1992) of the stratosphere and interplanetary space. These microbes should be in the first consideration when we discuss or test the interplanetary transfer of life.

## References

Arrage, A.A., Phelps, T.J., Benoit, R.E., Palumbo, A.V. and White, D.C. Bacterial sensitivity to UV light as a model for ionizing radiation resistance. *J Microbiol Methods*, **18**, 127-136, 1993.

Bruch, C.W. Microbes in the upper atomosphere and beyond. In: Gregory, P.A. and Monteith, J.L. (Eds.), Airborne microbes: symposium of the society of general microbiology. Cambridge University Press, London, pp. 345-373, 1967.

Castresana, J. Selection of conserved blocks from multiple alignments for their use in phylogenetic analysis. *Mol. Biol. Evol*., **17**, 540-552, 2000.

Dennis, R.J., Micossi, E., McCarthy, J., Moe, E., Gordon, E.J., Kozielski-Stuhrmann, S., Leonard, G.A. and McSweeney, S. Structure of the manganese superoxide dismutase from *Deinococcus radiodurans* in two crystal forms. *Acta Crystallograph Sect F Struct Biol Cryst Commun*, **62**, 325-329, 2006.

Fulton, J.D. Microorganisms of the upper atmosphere. 3. Relationship between altitude and micropopulation. *Appl Microbiol*, **14**, 237-240, 1966.

Greene, V.W., Pederson, P.D., Lundgren, D.A. and Hagberg, C.A. Microbiological exploration of stratosphere: Results of six

experimental flights. *Proceedings of the Atmospheric Biology Conference*, 199-211, 1964.

Griffin, D.W. Terrestrial microorganisms at an altitude of 20,000 m in Earth's atmosphere. *Aerobiologia*, **20**, 135-140, 2005.

Griffin, D.W. Non-spore forming eubacteria isolated at an altitude of 20,000 m in Earth's atmosphere: extended incubation periods needed for culture-based assays. *Aerobiologia*, **24**, 19-25, 2008.

Griffin, D.W., Garrison, V.H., Herman, J.R. and Shinn, E.A. African desert dust in the Caribbean atmosphere: microbiology and public health. *Aerobiologia*, **17**, 203-213, 2001.

Griffin, D.W., Kellogg, C.A., Garrison, V.H., Lisle, J.T., Borden, T.C. and Shinn, E.A. Atmospheric microbiology in the northern Caribbean during African dust events. *Aerobiologia*, **19**, 143-157, 2003.

Horneck, G. and Brack, A. Study of the origin, evolution and distribution of life with emphasis on exobiology experiments in earth orbit. *Adv Space Biol Med*, **2**, 229-262, 1992.

Iijima, I., Izutsu, N., Fuke, H., Saito, Y., Kawasaki, T., Matsuzaka, Y., Namiki, M., Ohta, S., Toriumi, M., Yamagami, T., Yamada, K., Seo, M., Yamagishi, A. and Yokohori, S. Development of the microbe sampling device. *JAXA Report*, 2006.

Imshenetsky, A.A., Lysenko, S.V., Kazakov, G.A. and Ramkova, N.V. On micro-organisms of the stratosphere. *Life Sci Space Res*, **14**, 359-362, 1976.

La Duc, M.T., Nicholson, W., Kern, R. and Venkateswaran, K. Microbial characterization of the Mars Odyssey spacecraft and its encapsulation facility. *Environ Microbiol*, **5**, 977-985, 2003.

Lighthart, B. and Shaffer, B.T. Airborne bacteria in the atmospheric surface layer: temporal distribution above a grass seed field. *Appl Environ Microbiol*, **61**, 1492-1496, 1995.

Link, L., Sawyer, J., Venkateswaran, K. and Nicholson, W. Extreme spore UV resistance of *Bacillus pumilus* isolates obtained from an ultraclean spacecraft assembly facility. *Microb Ecol*, **47**, 159-163, 2004.

Mason, J.M. and Setlow, P. Essential role of small, acid-soluble spore proteins in resistance of *Bacillus subtilis* spores to UV light. *J Bacteriol*, **167**, 174-8, 1986.

Mileikowsky, C., Cucinotta, F.A., Wilson, J.W., Gladman, B., Horneck, G., Lindegren, L., Melosh, J., Rickman, H., Valtonen, M. and Zheng, J.Q. Natural transfer of viable microbes in space. *Icarus*, **145**, 391-427, 2000.

Miller, J.H. A short course in bacterial genetics: a laboratory manual and handbook for *Escherichia coli* and related bacteria. Cold Spring Harbor Laboratory Press, Cold Spring Harbor, New York, 1992.

Murray, R.G.E. The Family Deinococcaceae. In: Balows, A., Truper, H.G., Dworkin, M., Harder, W. and Schleifer, K.-H. (Eds.), The Prokaryotes: a handbook on the biology of bacteria: ecophysiology, isolation, identification, applications. Springer-Verlag, New York, 1992.

Raulin-Cerceau, F., Maurel, M.C. and Schneider, J. From Panspermia to Bioastronomy, the evolution of the hypothesis of universal life. *Orig Life Evol Biosph*, **28**, 597-612, 1998.

Riesenman, P.J. and Nicholson, W.L. Role of the spore coat layers in *Bacillus subtilis* spore resistance to hydrogen peroxide, artificial UV-C, UV-B, and solar UV radiation. *Appl Environ Microbiol*, **66**, 620-626, 2000.

Rogers, L.A. and Meier, F.C. The collection of microorganisms above 36,000 feet. *Natio Geographic Soc Stratosphere Series*, **2**, 146, 1936.

Shaffer, B.T. and Lighthart, B. Survey of culturable airborne bacteria at four diverse locations in Oregon: urban, rural, forest, and coastal. *Microb Ecol*, **34**, 167-177, 1997.

Suresh, K., Reddy, G.S., Sengupta, S. and Shivaji, S. *Deinococcus indicus* sp. nov., an arsenic-resistant bacterium from an aquifer in West Bengal, India. *Int J Syst Evol Microbiol*, **54**, 457-461, 2004.

Swofford, D.L. PAUP. Phylogenetic Analysis Using Parsimony. Version 4.0 Beta 10. *Sinauer Associates, Sunderland, Massachusetts*, 2003.

Thompson, J.D., Gibson, T.J., Plewniak, F., Jeanmougin, F. and Higgins, D.G. The ClustalX windows interface: flexible strategies for multiple sequence alignment aided by quality analysis tools. *Nucleic Acids Res*., **25**, 4876-4882, 1997.

Vali, G., Christensen, M., Fresh, R.W., Galyan, E.L., Maki, R.L. and Schnell, R.C. Biogenic ice nuclei. Part II: Bacterial sources. *J*

*Atmos Sci*, **33**, 1565-1570, 1976.

Venkateswaran, K., Satomi, M., Chung, S., Kern, R., Koukol, R., Basic, C. and White, D. Molecular microbial diversity of a spacecraft assembly facility. *Syst Appl Microbiol*, **24**, 311-320, 2001.

Wainwright, M., Wickramasinghe, N.C., Narlikar, J.V. and Rajaratnam, P. Microorganisms cultured from stratospheric air samples obtained at 41 km. *FEMS Microbiol Lett*, **218**, 161-165, 2003.

Yang, Y., Itahashi, S., Yokobori, S. and Yamagishi, A. UV-resistant bacteria isolated from upper troposphere and lower stratosphere. *Biol Sci Space*, **22**, 18-25, 2008.